Orderform GJ- ZP Max

GUILLAUME JANSSEN
VISIONARY BLINDS & FABRICS

Contact details		Order details		Delivery details	
Company		Order no.		Delivery address	
Contact		Quote no.			
Phone		Project		Contact	
				Instruction	

Location	
Internal	☐
External	☐

Type	Cassette placement
GJ- ZP Max	Option 1

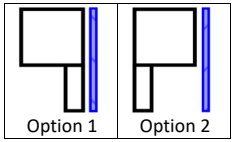

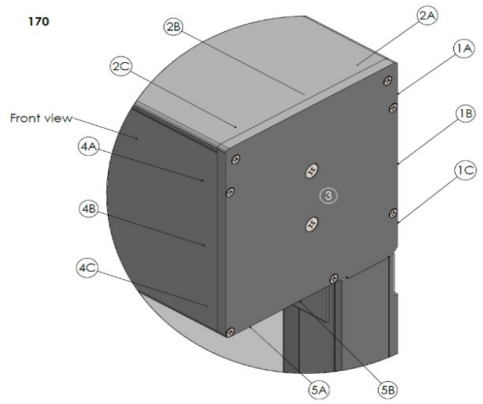

System dimensions in mm			Installation			Colour		Motor side	
Pos	Width	Draw	Fixing	Pre-drilling	Extra	RAL	Gloss	L/R	Cable output
1									Select output
2									Select output
3									Select output
4									Select output
5									Select output
6									Select output
7									Select output
8									Select output
9									Select output
10									Select output

Fabric	
Fabric type	Select fabric
Colour code	
Fabric front	
Zip colour	

Motor			
Type			
Voltage	230v	☐	110v ☐
Remote			
Extra's			
Accessories			

Extra instructions

For more information, instructions, etc. we refer to the available infosheets - Production margins are according the European Guidelines (ca. ±2mm) - Guillaume Janssen Terms and Conditions are applicable on all orders - This document has been compiled with the greatest possible care, but no rights may be derived from its contents